SIEMENS

1961P01

# Room air quality sensors QPA10x4

- **Maintenance-free $CO_2$ sensing element based on optical infrared absorption measurement (NDIR = non dispersive infrared)**
- **No recalibrations required**

## Use

In ventilation and air conditioning plants to enhance room comfort and optimize energy consumption by providing demand-controlled ventilation. The sensor acquires $CO_2$ concentrations and temperature.

*Important!*

The sensors may not be deployed as safety devices, e.g. as gas or smoke warning devices!

## Type summary

| *Type* | *Order number* | *Designation* |
|---|---|---|
| QPA1004 | S55720-S453 | Room sensor $CO_2$ |
| QPA1064 | S55720-S454 | Room sensor $CO_2$/T |

## Engineering notes

The sensor must be powered by a transformer for safety extra low-voltage (SELV) with separate windings, suited for 100 % duty.

| | |
|---|---|
| Cable routing and cable selection | On applications with EMC problems, use shielded cables. For secondary power lines and signal lines, use twisted-pair cables. |

## Mounting notes

| | |
|---|---|
| Mounting location | Inner wall of the room to be ventilated, not in niches, not behind curtains, not above or near heat sources, and not exposed to direct light from spot lights.<br>Do not expose the sensor to direct solar radiation.<br>Seal the end of the conduit at the sensor to prevent false measurements due to drafts through the conduit. |
| Mounting instructions | Mounting instructions are enclosed in the package. |

## Disposal

This symbol or any other national label indicate that the product, its packaging, and, where applicable, any batteries may not be disposed of as domestic waste. Delete all personal data and dispose of the item(s) at separate collection and recycling facilities in accordance with local and national legislation.
For additional details, refer to Siemens information on disposal.

## Technical data

| | | |
|---|---|---|
| Power supply | Operating voltage | AC 24 V ±20 % or DC 15…35 V (SELV)<br>or<br>AC/DC 24 V class 2 (US) |
| | Frequency | 50/60 Hz at AC 24 V |
| | External supply line protection (EU) | Fuse slow max. 10 A or<br>Circuit breaker max. 13 A<br>Characteristic B, C, D according to EN 60898 or<br>Power source with current limitation of max. 10 A |
| | Power consumption | <1.7 VA, typ. <0.5 VA |
| Cable lengths for measuring signal | Measuring range | 0...2000 ppm |
| Functional data "$CO_2$" | Measuring accuracy at 23 °C and 1013 hPa | ≤± (60 ppm + 4 % of measured value) |
| | Long time drift | ≤±7 % of measuring range / 5 years (typically) |
| | Output signal, linear (terminal U1) | DC 0...10 V ≙ 0...2000 ppm, max. ±1 mA |
| | Recalibration free | 5 years |
| Functional data "Temperature" with QPA1064 | Measuring range | 0...50 °C |
| | Measuring accuracy at AC 24 V and 23 °C | ±0.5 K |
| | Output signal, linear (terminal U2) | DC 0...10 V ≙ 0...50 °C, max. ±1 mA |
| Degree of protection | Protection degree of housing | IP30 according to EN 60529 |
| | Protection class | III according to EN 60730-1 |
| Electrical connections | Screw terminals for | 1× 2.5 $mm^2$ or 2× 1.5 $mm^2$ |
| Environmental conditions | Operation to<br>Climatic conditions<br>Temperature (housing incl. electronics)<br>Humidity<br>Mechanical conditions | IEC 60721-3-3<br>Class 3K3<br>0…50 °C<br>0…95 % r. F (non condensing)<br>Class 3M2 |
| | Transport to<br>Climatic conditions<br>Temperature<br>Humidity<br>Mechanical conditions | IEC 60721-3-2<br>Class 2K3<br>−25...+70 °C<br><95 % r. F.<br>Class 2M2 |

| | | |
|---|---|---|
| Materials and colors | Cover | ASA + PC, NCS S 0502-G (white)<br>equates to RAL9010 |
| | Housing | ASA + PC, NCS 2801-Y43R (grey)<br>equates to RAL7035 |
| | Mounting plate | PC, NCS 2801-Y43R (grey)<br>equates to RAL7035 |
| | Sensor (complete) | Silicone free |
| | Packaging | Corrugated cardboard |
| Directives and Standards | Product standard | EN 60730-1<br>Automatic electrical controls for household and similar use |
| | Electromagnetic compatibility (Applications) | For use in residential, commerce, light-industrial and industrial environments |
| | EU Conformity (CE) | CE1T1961xx *) |
| | RCM Conformity | CE1T1961en_C1 *) |
| | UL | UL 873, http://ul.com/database |
| Environmental compatibility | The product environmental declaration CE1E1961*) contains data on environmentally compatible product design and assessments (RoHS compliance, materials composition, packaging, environmental benefit, disposal). | |
| Weight | Incl. packaging | Approx. 0.10 kg |

*) The documents can be downloaded from http://siemens.com/bt/download.

## Connection terminals

### QPA10x4

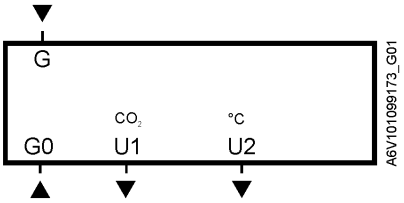


| | |
|---|---|
| G | System potential AC 24 V (SELV) or DC 15...35 V |
| G0 | System neutral and measuring neutral |
| U1, U2 | Signal output DC 0...10 V |

## Dimensions

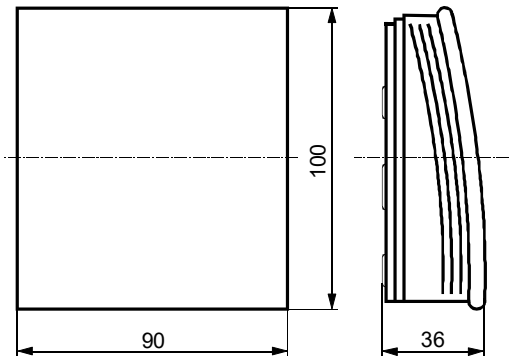


Dimensions in mm

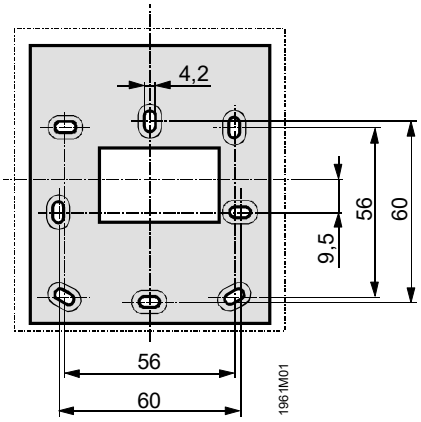


Drilling plan

Issued by:
Siemens Switzerland Ltd.
Smart Infrastructure
Global Headquarters
Theilerstrasse 1a
CH-6300 Zug
+41 58 724 2424
www.siemens.com/buildingtechnologies

© Siemens 2017
Technical specifications and availability subject to change without notice